# Class 10- Science

# Light (Lens)-Study notes

**Refraction of Light:** When light travels obliquely from one medium to another, the direction of propagation of light in second medium changes. This phenomenon is known as refraction of light.

The path of light ray changes when it moves from one medium to another.

When light way travels from:

- Rarer medium to denser medium it bends toward the normal as speed of light decreases in denser medium.
- Denser medium to rarer medium it bends away from the normal as speed of light increases in rarer medium.

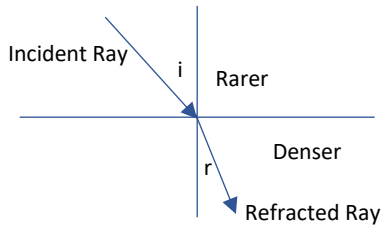


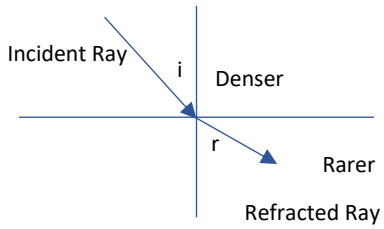


The ability of a medium to refract light is called its **optical density**. A rarer medium is called optically rarer medium with less refractive index. A denser medium is called optically denser medium with large refractive index.

Some of examples of refraction are:

- The letters appear to be raised when viewed through a glass slab placed over some printed matter.
- The bottom of a tank or pond containing water appear to be raised.
- A lemon kept in water in a glass tumbler appears to be bigger than its actual size, when viewed from the sides.
- A coin placed in water appears slightly raised above its actual position.
- When a pencil is partly immersed in water in a glass tumbler, it appears to be displaced at the interface of water and air.

  Light reaching us from the portion of the pencil inside water seems to come from a different direction, compared to the part above the water. Hence the pencil appears to be displaced, when partly immersed in water.

## Refraction of light through a rectangular Glass Slab:

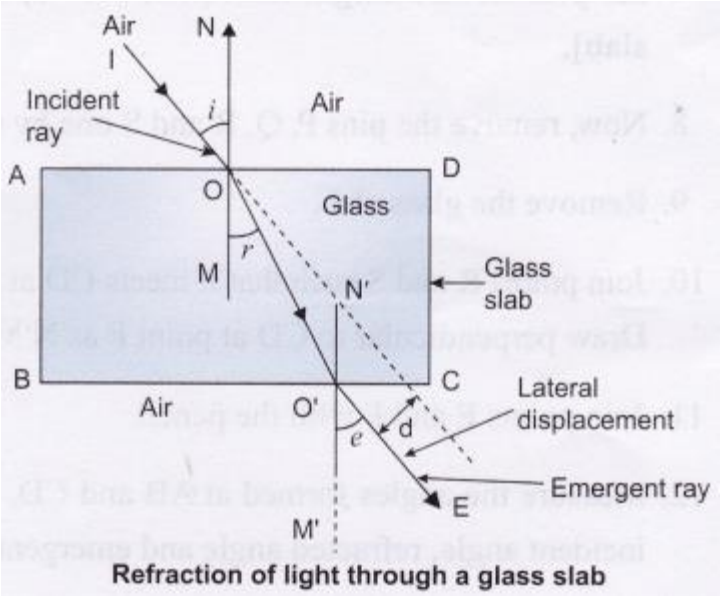

Refraction of light through a glass slab

When a light ray enters glass slab, refraction takes place twice.

Case 1: When light ray enters glass slab, from rarer medium(air) to denser medium(glass). Light ray bends towards the normal.

Case 2: When light ray exits from glass slab, from denser medium to rarer medium. Light ray bends away from the normal.

The extent of bending of the ray of light at the opposite parallel faces AD and BC of the rectangular slab is equal and opposite so the emergent ray is parallel to the incident ray but shifted sideward slightly.

**Lateral displacement:** The perpendicular distance between the emergent ray and the incident ray is called the lateral displacement.

**Laws of refraction:** Refraction of light occurs according to the laws of refraction:

1. The incident ray, the refracted ray and the normal to the interface of two transparent media at the point of incidence, all lie in the same plane.
2. The ratio of sine of angle of incidence to the sine of angle of refraction is a constant, for the light of a given colour and for the given pair of media. This law is also known as **Snell's law of refraction.**
   $\frac{\sin i}{\sin r} = constant$, where i is the angle of incidence and r is the angle of refraction.
   This constant is called refractive index (μ or n).

**Refractive index**: The extent of the change in direction that takes place in the given pair of media is called refractive index.

Refractive index is linked with the relative speed of propagation of light in different media. Light propagates with different speeds in different media.

Speed of light is fastest in vacuum, $3 \times 10^8$ m/s.

Refractive index of medium 2 with respect to medium 1 is expressed as:

$$n_{21} = \frac{speed\ of\ light\ in\ medium\ 1}{speed\ of\ light\ in\ medium\ 2} = \frac{v_1}{v_2}$$

Similarly, refractive index of medium 1 with respect to medium 2 is expressed as:

$$n_{12} = \frac{speed\ of\ light\ in\ medium\ 2}{speed\ of\ light\ in\ medium\ 1} = \frac{v_2}{v_1}$$

**Absolute refractive index of a medium ($n_2$):** The refractive index of a medium with respect to vacuum or air (medium 1 is vacuum or air).

$$n_2 = \frac{speed\ of\ light\ in\ air}{speed\ of\ light\ in\ medium} = \frac{c}{v}$$

The refractive index of air is minimum and the refractive index of diamond is maximum.

Optically denser medium has large refractive index.

**What is a lens?**

A transparent material bound by two surfaces, of which one or both are spherical, forms a lens. A lens is bound by at least one spherical surface.

**Types of lenses:** There are two types of lenses.

**Convex Lens (Double convex lens):** A lens which has two spherical surfaces, bulging outwards. It is thicker in the middle as compared to edges. Convex lens is also called a **converging lens** as it converges light rays.

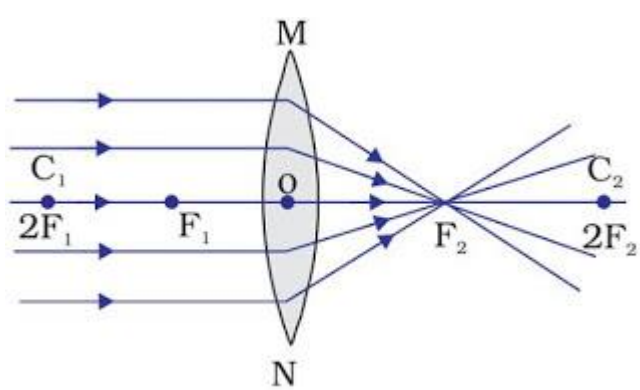

**Concave Lens (Double concave lens):** A lens which has two spherical surfaces, curved inwards. It is thicker at the edges than at the middle. Concave lens is also called diverging lens as it diverges light rays.

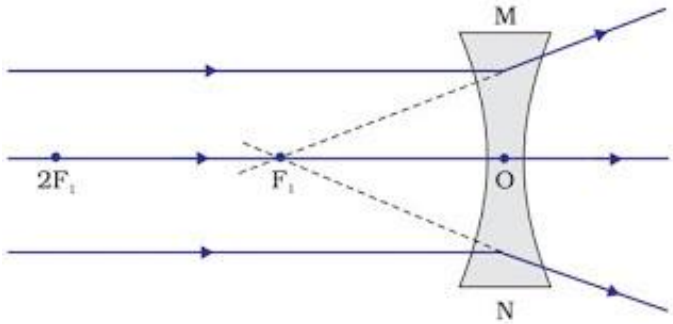


**Centre of curvature(C):** The centres of spheres of which the lens is a part of. There are two centres $C_1$ and $C_2$.

**Principal Axis:** An imaginary line passing through the two centres of curvature of a lens is called principal axis.

**Optical centre(O):** The central point of a lens is its optical centre. It is represented by O.

- A ray of light through the optical centre of a lens passes without suffering any deviation.

**Aperture:** The effective diameter of the circular outline of a spherical lens is called its aperture.

- A thin lens has aperture much less than its radius of curvature.

**Principal Focus of convex lens(F):** The point on principal axis to which all rays parallel to the principal axis after refraction converge is called the principal focus of the convex lens.

**Principal Focus of concave lens(F):** The point on principal axis from which all rays parallel to the principal axis after refraction appear to diverge is called the principal focus of the concave lens.

A lens has two principal foci, represented by $F_1$ and $F_2$.

**Focal Length(f):** The distance of the principal focus from the optical centre of a lens is called its focal length.

**Rules to draw Ray diagram:**

1. When a ray of light from the object is parallel to the principal axis.

In case of convex lens after refraction the ray passes through the principle focus on the other side of the lens.

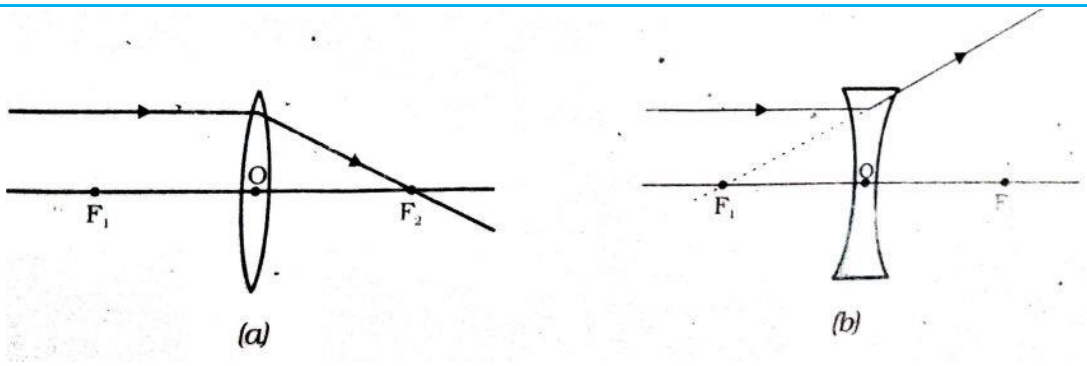


In case of concave lens after refraction the ray appears to diverge from the principle focus on the same side of the lens.

2. When a ray of light passes through the principal focus.

In case of convex lens after refraction the ray will emerge parallel to the principal axis.

In case of concave lens, the ray of light appearing to meet at the principle focus after refraction emerge parallel to the principal axis.

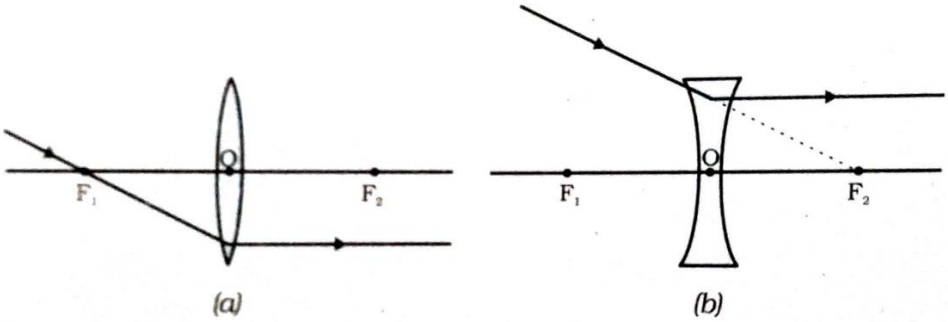


3. When a ray of light passes through the optical centre of the lens.

The ray will emerge without any deviation in both the lens.

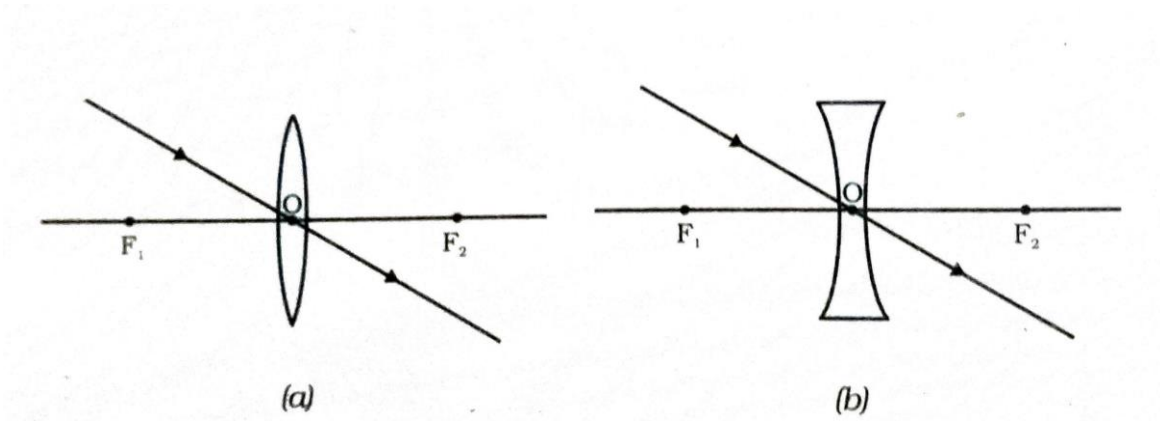

## Image formation by lenses:

### The nature, position and relative size of the image formed by convex lens.

- When object is at infinity

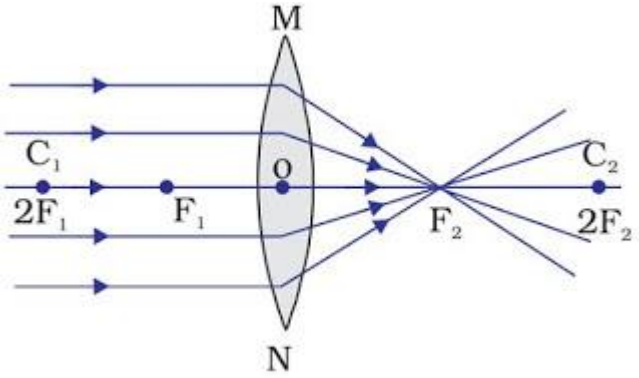


Image position: At Focus $F_2$

Size of the image: Highly diminished, point-sized

Nature of the image: Real and Inverted.

- When object is beyond $2F_1$

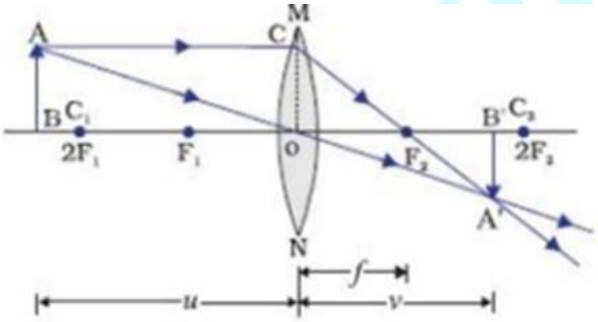


Image position: Between $F_2$ and $2F_2$

Size of the image: Diminished

Nature of the image: Real and Inverted.

- When the object is at 2 $F_1$

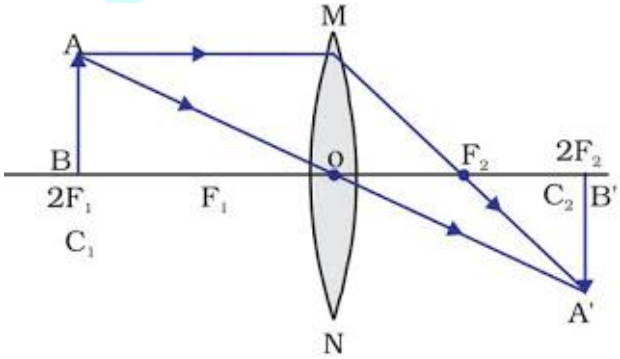


Image position: At $2F_2$

Size of the image: Same size

Nature of the image: Real and Inverted.

- When the object is between $F_1$ and 2 $F_1$

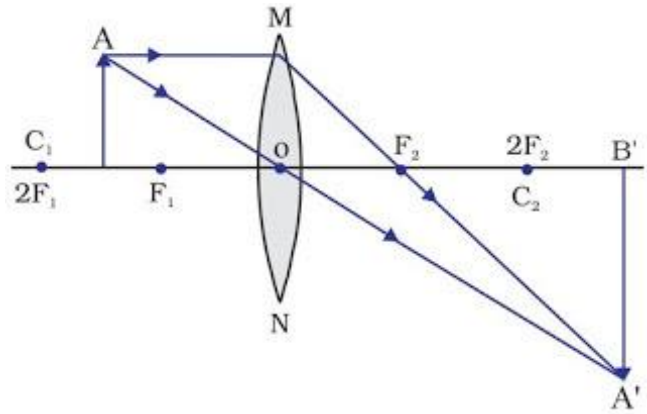


Image position: Beyond $2F_2$

Size of the image: Enlarged

Nature of the image: Real and Inverted.

- When the object is at the focus $F_1$

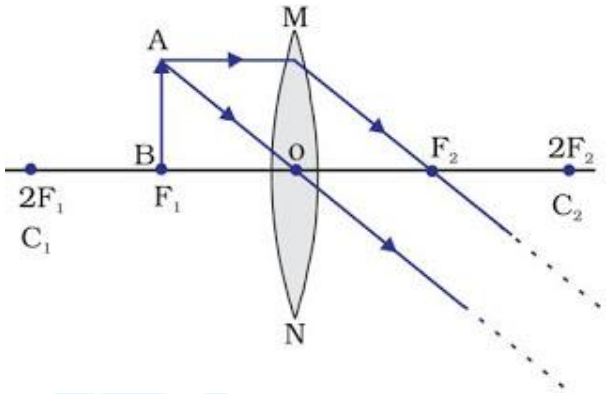


Image position: At infinity

Size of the image: Infinitely large or highly enlarged

Nature of the image: Real and Inverted.

- When the object is between focus $F_1$ and optical centre O

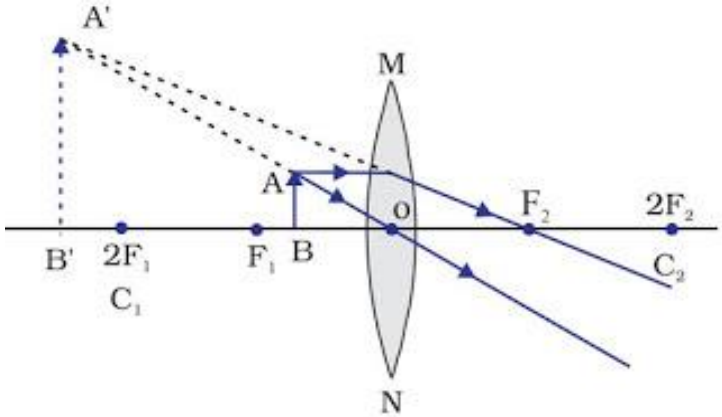


Image position: on the same side of the lens as the object

Size of the image: Enlarged

Nature of the image: Virtual and erect.

### The nature, position and relative size of the image formed by concave lens.

- When object is at infinity

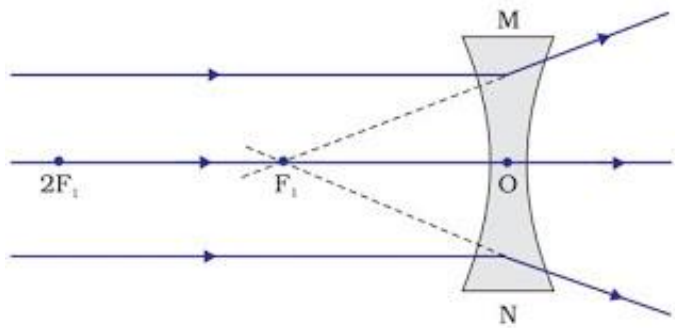


Image position: At Focus $F_1$

Size of the image: Highly Diminished, point-sized

Nature of the image: Virtual and erect.

- When object is between infinity and optical centre O

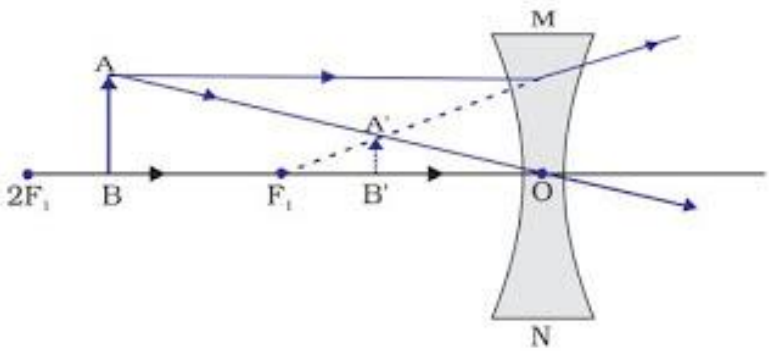


Image position: between Focus $F_1$ and the optical centre

Size of the image: diminished

Nature of the image: Virtual and erect.

**Lens Formula:** $\frac{1}{v} - \frac{1}{u} = \frac{1}{f}$ , where $v$ is image distance, $u$ is object distance and $f$ is the focal length. For convex lens focal length is positive and for concave lens focal length is negative.

**Magnification($m$)**: The ratio of height of image and the height of object.

$m = \frac{h_i}{h_o} = \frac{v}{u}$ , where $h_i$ is the height of image and $h_o$ is the height of object.

Sign convention: New Cartesian sign convention is followed while dealing with the reflection of light by spherical lens. Optical centre (O) of the lens is taken as origin and the principal axis is taken as X-axis.

| | **convex lens** | **concave lens** |
|---|---|---|
| **focal length(f)** | positive | negative |
| **object distance(u)** | negative | negative |
| **image distance(v)** | positive for real image, negative for virtual image | |

If m is negative image is real.

If m is positive image is virtual.

**Power of a lens:** The ability of a lens to converge or diverge light rays is called power (P) of the lens. It is defined as the reciprocal of focal length.

$$P = \frac{1}{f}, \text{ f is given in metres.}$$

SI unit of Power is Dioptre (D). 1 D = 1 $m^{-1}$.

1 Dioptre is the power of a lens whose focal length is 1 m. If focal length is given in cm, then

$$P = \frac{100}{f}, \text{ f is given in cm.}$$

- For concave lens, power is negative. For example, -2.5 D
- For convex lens, power is positive. For example, 2.0 D

When two or more lens are combined, then combined focal length, power and magnification is calculated as:

$$P = P_1 + P_2 + P_3 + \cdots$$

$$\frac{1}{f} = \frac{1}{f_1} + \frac{1}{f_2} + \frac{1}{f_3} + \cdots$$

$$m = m_1 \times m_2 \times m_3 \times \ldots$$

Lenses are combined to increase the sharpness of the image and make it defect free.

Additive property of powers of the lenses is used to design lens systems to minimize defects in images produced by a single lens, which are commonly used in design of camera lenses, microscopes and telescopes.